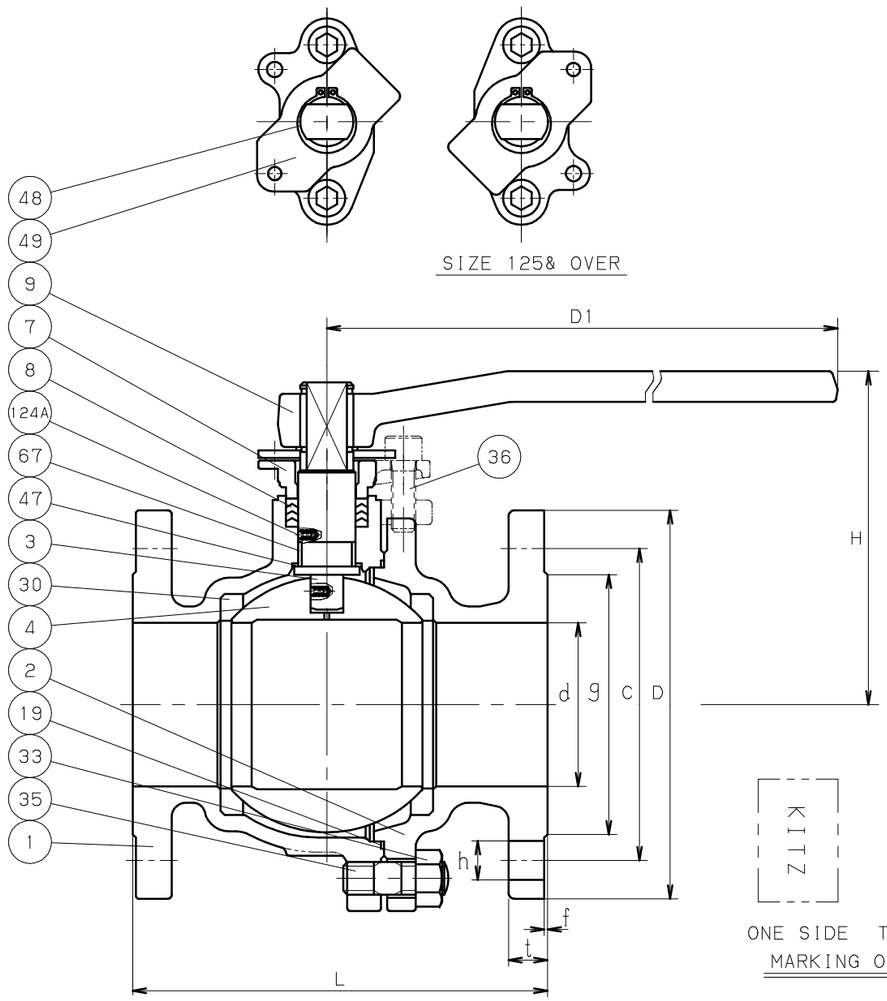

SIZE 125& OVER

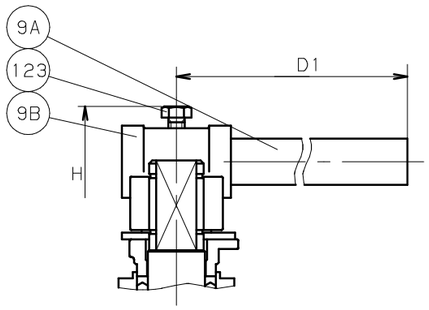

SIZE 150& OVER

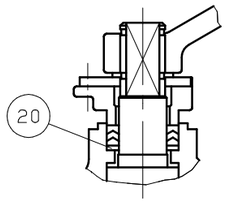

UP TO SIZE 32

ONE SIDE

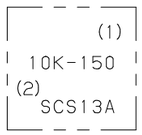

THE OTHER SIDE

MARKING ON THE BODY

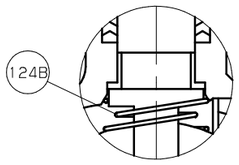

UP TO SIZE 50

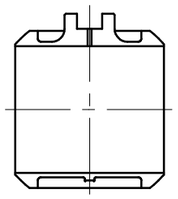

SIZE 200 ONLY

CORED CAVITY

DIMENSIONS

UNIT;mm

NOMINAL SIZE A	NOMINAL SIZE B	d	H	D1	L	END FLANGE D	BOLT HOLE C	BOLT HOLE NO.	BOLT HOLE h	BOLT SIZE	g	t	f	APPROX. MASS (kg)	
15	1/2	15	102	130	110	95	70	4	15	M12	51	12	1	2.2	
20	3/4	20	105	130	120	100	75	4	15	M12	56	14	1	2.6	
25	1	25	124	160	130	125	90	4	19	M16	67	14	1	4.4	
32	1.1/4	32	128	160	140	135	100	4	19	M16	76	16	2	5.8	
40	1.1/2	40	115	230	165	140	105	4	19	M16	81	16	2	7.1	
50	2	50	120	230	180	155	120	4	19	M16	96	16	2	9.0	
65	2.1/2	65	155	400	190	175	140	4	19	M16	116	18	2	16	
80	3	80	165	400	200	185	150	8	19	M16	126	18	2	19	
100	4	100	200	460	230	210	175	8	19	M16	151	18	2	29	
125	5	125	220	460	300	250	210	8	23	M20	182	20	2	48	
150	6	150	295	1000	340	280	240	8	23	M20	212	22	2	70	
200	8	200	355	1500	450	330	290	12	23	M20	262	22	2	105	

NOTE (1) VALVE SIZE IDENTIFICATION. (2) EITHER SCS13A OR S13A IS INDICATED.

NO	NAME OF PARTS	QTY	MATERIALS	SPECIFICATIONS
1	BODY	1	STAINLESS STEEL	SCS13A
2	BODY CAP	1	STAINLESS STEEL	SCS13A
3	STEM	1	STAINLESS STEEL	SUS304
4	BALL	1	STAINLESS STEEL	SUS304 OR SCS13A
				OR SUSF304
7	GLAND	1	STAINLESS STEEL	SCS13A
8	GLAND PACKING	1S	PTFE	
9	HANDLE	1	DUCTILE IRON	FCD400-15
9A	HANDLE BAR	1	CARBON STEEL	SGP
9B	HANDLE HEAD	1	DUCTILE IRON	FCD400-15
19	GASKET	1	PTFE	
20	PACKING WASHER	1	STAINLESS STEEL	SUS316L
30	BALL SEAT	2	HYPATITE PTFE	
33	CAP NUT	1S	STAINLESS STEEL	A194 Gr.8
35	CAP BOLT	1S	STAINLESS STEEL	A193 Gr.B8
36	GLAND BOLT	1S	STAINLESS STEEL	
47	THRUST WASHER	1	G/F PTFE	(SIZE 100& OVER)
48	SNAP RING	1	STAINLESS STEEL	SUS304-CSP
49	STOPPER	1	STAINLESS STEEL	SUS304
67	STEM BEARING	1	G/F PTFE	
123	HANDLE BOLT	1	CARBON STEEL	
124A	SPRING & PIN	1S	STAINLESS STEEL	SUS316-WPA & SUS316
				(SIZE 65& OVER)
124B	SPRING	1	STAINLESS STEEL	SUS316-WPA
				(UP TO SIZE 50)
			1S=1 SET	

STANDARD	FACE TO FACE OR END TO END	KITZ STANDARD
	END CONNECTION	JIS B2220 10K
	WALL THICKNESS	ASME B16.34 CLASS 150
	PRESSURE TEST	KITZ STANDARD
	PRODUCT CODE	
	FIGURE	10UTB

10K CAST STAINLESS STEEL BALL VALVES

ANTI-STATIC DEVICE, FULL BORE, FLANGED ENDS.

DATE APPD	OCT.16.'17	DRAWING NO	△		
APPD BY	H. NAKAGAWA	965-A20003	△		
CHKD BY	Y. ASAKAWA		△		
DSGND BY	Y. OSADA		△		
DRAWD BY	Y. ASAKAWA	REV-08	MARK	DATE	BY

KITZ CORPORATION

KITZ